Grade Level	Content Area	Course Title	Unit Title
10th Grade	Science	Biology	Genetics: It's All in the Family

Length of Unit	Time of Year Taught	Expected Prior Knowledge
5 Days	2nd Quarter, in conjunction with 10th grade math lessons on probability in genetics	The role of the cell and cellular processes, DNA, chromosomes Students have had instruction and considerable experience using the 6-trait presentation rubric.

Unit Description	Students will create a pedigree to represent their family and trace a specific trait through several generations.
Strand(s), Concept(s), and PO(s)	HSS4-C2-PO3, HSS1-C1-PO4 Understand the molecular basis of heredity and resulting genetic diversity. Explain how genotypic variation occurs and results in phenotypic diversity.
Summative Assessment	The students will demonstrate analysis of a trait by completing a personal pedigree assessment.
Assessment Scoring	A 20-point create-a-pedigree chart assessment plus x/6 presentation score = 100%
Materials/Resources Needed	Sample pedigree, pedigree symbol chart, Genetics According to Mendel – Part II – Pedigrees, pedigree chart assessment and rubric, 6-trait presentation rubric

	Lesson 1	Lesson 2	Lesson 3	Lesson 4	Lesson 5
PO Focus	HSS4-C2-PO3	HSS4-C2-PO3	HSS4-C2-PO3 HSS1-C1-PO4	HSS4-C2-PO3	HSS4-C2-PO3
Lesson Instruction	**Objective:** Identify relationships among individuals in a pedigree. Define traits that are dominant and recessive. **Discussion:** Ask why some people have certain traits and others do not. Allow time for students to respond in their notebooks and pair share. Ask for volunteers to share out. Show students a sample pedigree. Hand out pedigree symbol chart. **Teacher Input:** Demonstrate how the symbols show the relationships of the individuals in addition to how a trait is passed down from one family member to another. Allow time for students to examine pedigree and write a response to the following prompt in their notebooks: *Is the trait that is being traced a dominant or a recessive trait? Explain your reasoning.* Introduce new vocabulary words (*gene,*	**Objective:** Solve a Punnett square to demonstrate a mating from a sample pedigree and the resulting offspring. **Discussion:** Review how letters are used to represent dominant and recessive traits and that these are the alleles of the different genes. **Teacher Input:** Show students how alleles are inherited. Explain that different ratios of alleles present determine the genotypes and phenotypes of the	**Objective:** Create a pedigree based on a genetic history. **Teacher Input:** Demonstrate how an actual trait from teacher's family has been passed down. Draw a sample personal pedigree as the genetic history is explained. Reiterate the relationships in the pedigree and have students compare them to the pedigree symbol chart.	**Objective:** Create a pedigree based on a genetic history. **Teacher Input:** Review the logic of a Pedigree diagram. Answer any questions. Allow time for students to draw their pedigrees. Have students tell their story using the pedigree to check for understanding. Correct any mistakes in relationships or inheritance. Have students identify the genotypes and phenotypes for all	**Objective:** Demonstrate mastery of the strand/concept/PO. Practice presentation skills.

	allele) and add them to the word wall in the classroom. Explain that different forms of a gene are called alleles and are represented by letters (capital letters designate a dominant allele, while lower-case letters designate a recessive allele) Model naming lettered pairs using the following: *homozygous dominant, homozygous recessive, heterozygous*. Add these terms to the word wall in the classroom.	individuals. **Student Practice:** Distribute sample pedigree (same one from yesterday) for students to practice creating Punnett squares. **Discussion:** Patterns in inheritance	(Additional Strand/ Concept HSS1-C4). Hand out and review the pedigree assignment and rubric, as well as the presentation rubric.	individuals in the pedigree.	
	Lesson 1	**Lesson 2**	**Lesson 3**	**Lesson 4**	**Lesson 5**
Student Activities	**Objective:** Students will identify relationships among individuals in a pedigree. Students will write a response in their notebooks to the following prompt: *Why do some people have certain traits and others do not?* **Student Practice**: Students examine a sample pedigree and determine the relationships among the people represented. Students determine if the trait that the pedigree is displaying is dominant or recessive. Students write their response in their notebooks and explain their thinking Students add the following terms to their personal dictionaries/glossaries: *gene, allele* Students will take notes on how lettered pairs are named.	**Objective:** Students will use a Punnett square as a tool to represent mating pairs and their offspring. Students use letters to assign traits to a given scenario. Students fill out Punnett squares. Students determine genotypic ratios. Students determine phenotypic ratios. Students participate in a discussion about the patterns that emerge from doing these problems.	Objective: Students obtain family data (or create data) to construct a Pedigree chart. Students follow along while the teacher demonstrates putting together a personal pedigree based on his/her own family. Students respond to questions posed by the teacher as he/she checks for understanding. Students read the directions for the Pedigree chart assignment and ask questions. Students complete the assignment for homework.	**Objective:** Students synthesize genetic information into a pedigree. Students draw and label their Pedigrees, using standard pedigree symbols. Students identify the genotypes and phenotypes of all individuals in the pedigree.	**Objective:** To demonstrate mastery of the strand/concept/PO. Students present the Pedigrees they created to the class.

I Genetics According to Mendel

Part II

PEDIGREES

What is a Pedigree?

To understand the process of marker assisted selection (MAS), we first must understand a ***pedigree***. A pedigree is the family history of matings and the offspring they produce with reference to specific genetic traits. Animal and plant breeders have long used pedigrees to help select individuals they believed to have desirable traits. In the case of selective breeding, the researchers are interested in the presence or absence of a trait.

An organism's pedigree helps researchers determine the inheritance of a trait. Using modern analysis techniques, researchers search for the DNA sequence of the gene(s) that controls the trait. In the process, they may discover other related DNA sequences near to or present in the gene that always accompany the gene of interest. These accompanying sequences, called ***molecular markers***, are usually shorter and easier to identify than the larger, more complex gene sequence. The presence of markers for a trait of interest gives researchers a way to determine the presence or absence of desired alleles.

Module II will investigate the relationships among pedigrees, DNA analysis, and marker assisted selection.

Pedigree Analysis

In a pedigree analysis, information about family members is summarized in a special kind of diagram. Each individual is represented by a symbol, a square for a male and a circle for a female. Individuals who have the trait of interest are represented by black squares (■) or circles (●). Empty squares (□) or circles (○) represent individuals that do not have the trait. The symbols for individuals are arranged in horizontal rows by generation, with each generation denoted by a Roman numeral. Each individual within the generation is numbered. In this manner, it is easy to refer to an individual, such as II-2, which means the second generation, second individual. (See Figure 1.)

When two individuals mate, they are connected by a horizontal line. Their offspring are arranged together under the connecting parental line. Siblings are arranged in birth order from left to right. With this information, the use of Mendelian rules, and the rules of probability, it is possible to generate a hypothesis (educated guess) about the alleles that are controlling the trait. The hypothesis from pedigree data usually includes whether an allele is ***dominant*** or ***recessive***, as

Figure 1

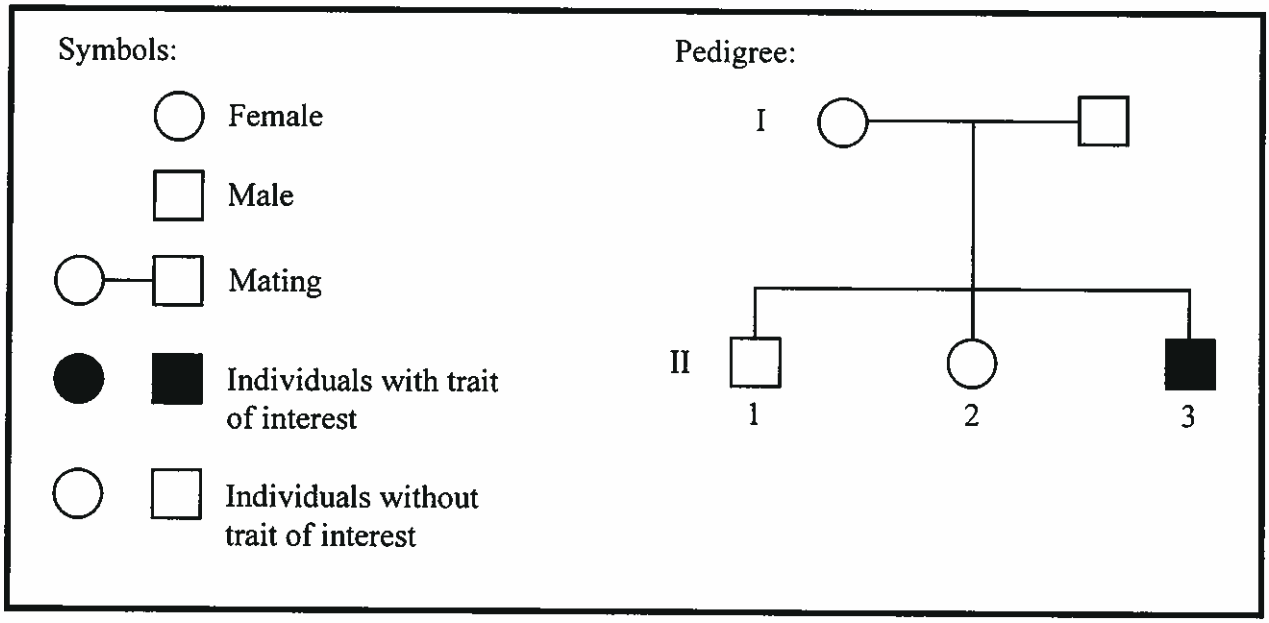

well as predictions about the genotype of the individuals in the pedigree. This hypothesis can be used to make predictions about the probable genotypes and phenotypes of future offspring.

Traits controlled by recessive or dominant alleles show a definite pattern of inheritance in the pedigree diagram. Traits controlled by a dominant allele appear in all individuals that possess one or more copies of the allele.

Individuals with homozygous dominant alleles (AA) or heterozygous alleles (Aa) will express the dominant phenotype. A recessive allele cannot be detected in a heterozygous individual and may stay hidden in a family for many generations until a homozygous recessive (aa) individual appears. The parents of an offspring that expresses a recessive trait (aa) must both be heterozygous (Aa) if they did not express the recessive trait themselves.

Another question that often can be answered using pedigree analysis is the probability that future offspring may be heterozygous (carriers) or may be homozygous and have the recessive trait. Pedigree information is used to determine the chance that individuals who both have a family history of a trait may produce offspring with the trait.

We will use Pedigree 1 below as an example of how a pedigree can be used to determine if a trait is dominant or recessive and predict the individuals' genotype and phenotype. The use of Punnett squares also can be very helpful in determining the genotype of the parents and offspring.

In Pedigree 1, an original parent (I-2) has the trait of interest. The absence of individuals in generations II and III with the trait of interest indicates that the trait is controlled by a recessive allele.

If the individuals with the trait of interest are homozygous recessive, you can make predictions of the genotypes of the other individuals. I-2 and IV-1 have the trait, so their genotypes would be aa.

The recessive allele has traveled from the first generation to the fourth without being expressed. In order for an individual to have the trait, it must have been inherited through a recessive allele from each parent. An individual who is a carrier (heterozygous) would not have the trait. This is the case of the parents of IV-1. Individuals III-1 and III-2 have to be heterozygous (Aa) to have the progeny IV-1 with the trait. Since individual I-2 is homozygous recessive (aa), his offspring II-2 and II-3 must be heterozygous. The exact genotypes of I-1, II-1, II-4, III-3 through III-6, and IV-2 through IV-4 are impossible to determine, except that they must have either the homozygous dominant (AA) or heterozygous (Aa) genotype. The pedigree of additional offspring would be needed to determine their genotypes.

Credit Notes

Atherly, Alan G.; Girton, Jack R.; and McDonald, John F. *The Science of Genetics*. Saunders College Publishing. 1999

Olson, Tim. New Genes: Good and Bad. Dept. of Animal Sciences, University of Florida.

Suszkiw, Jan. *Mapping the Way to Bovine Bounty*. ARS National Program Publication.

Pedigree 1

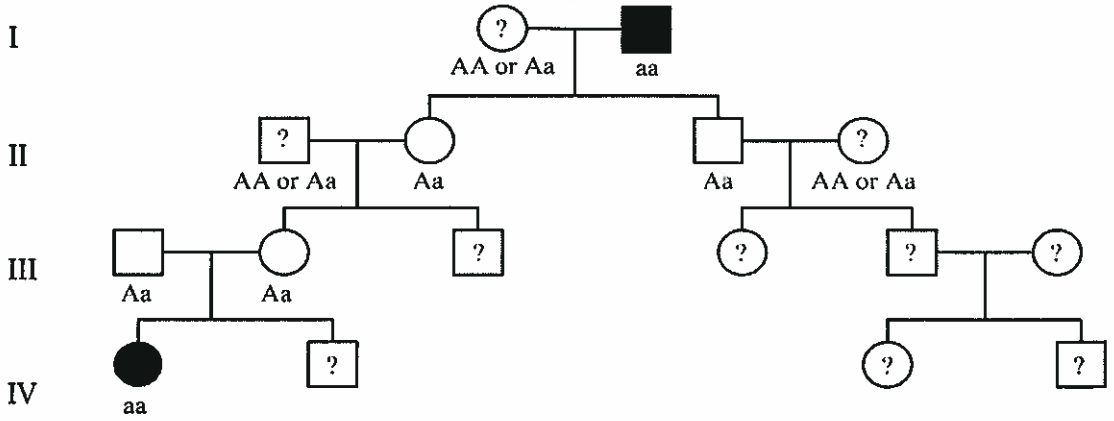

In Pedigree 1, an original parent (I-2) has the trait of interest. The absence of individuals in generations II and III with the trait of interest indicates that the trait is controlled by a recessive allele.

Standard Pedigree Symbols Biology

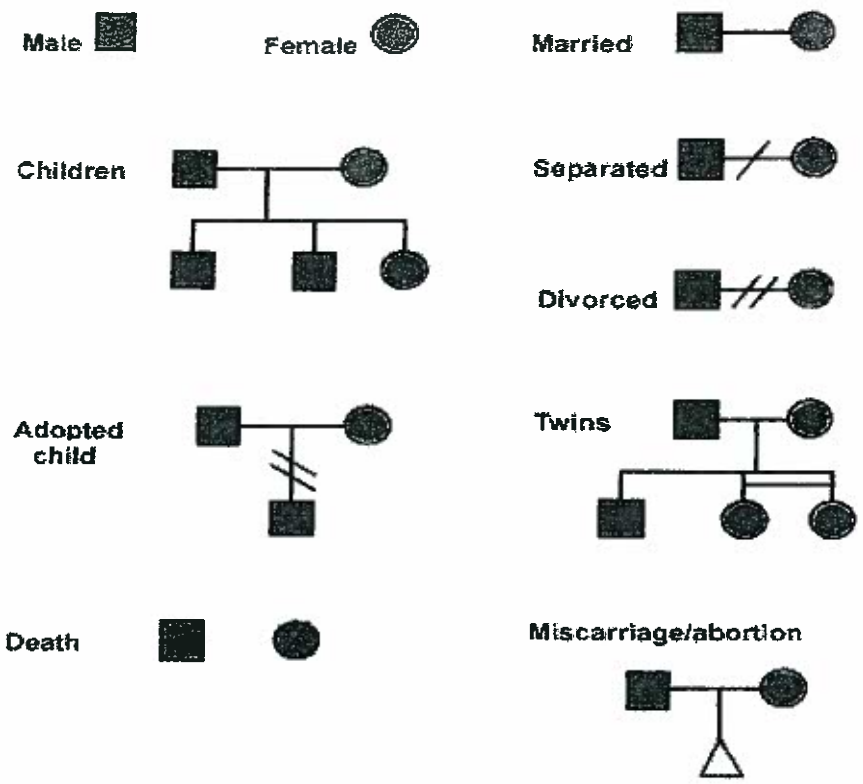

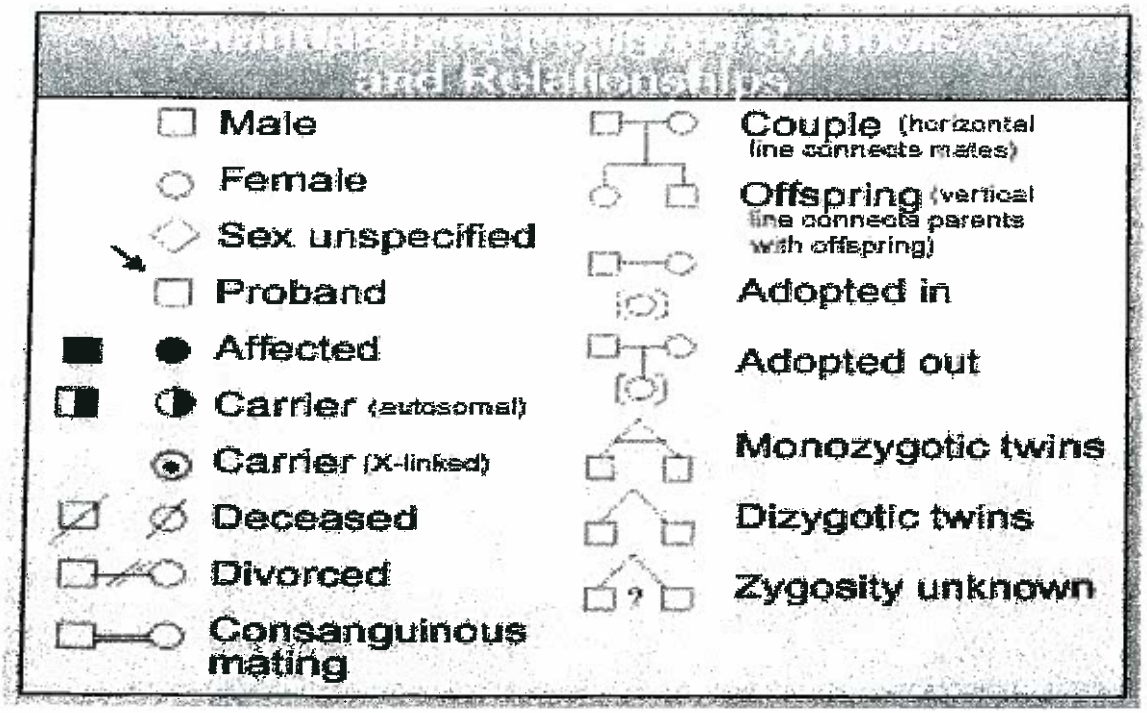

Sample Pedigree

Below is a pedigree for an inherited lung disease.

Provide the **phenotypes** and **genotypes** of each of the individuals marked with lower case letters. Use "L" for normal and "l" for affected.

Key:

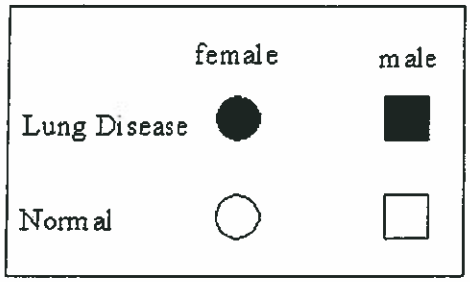

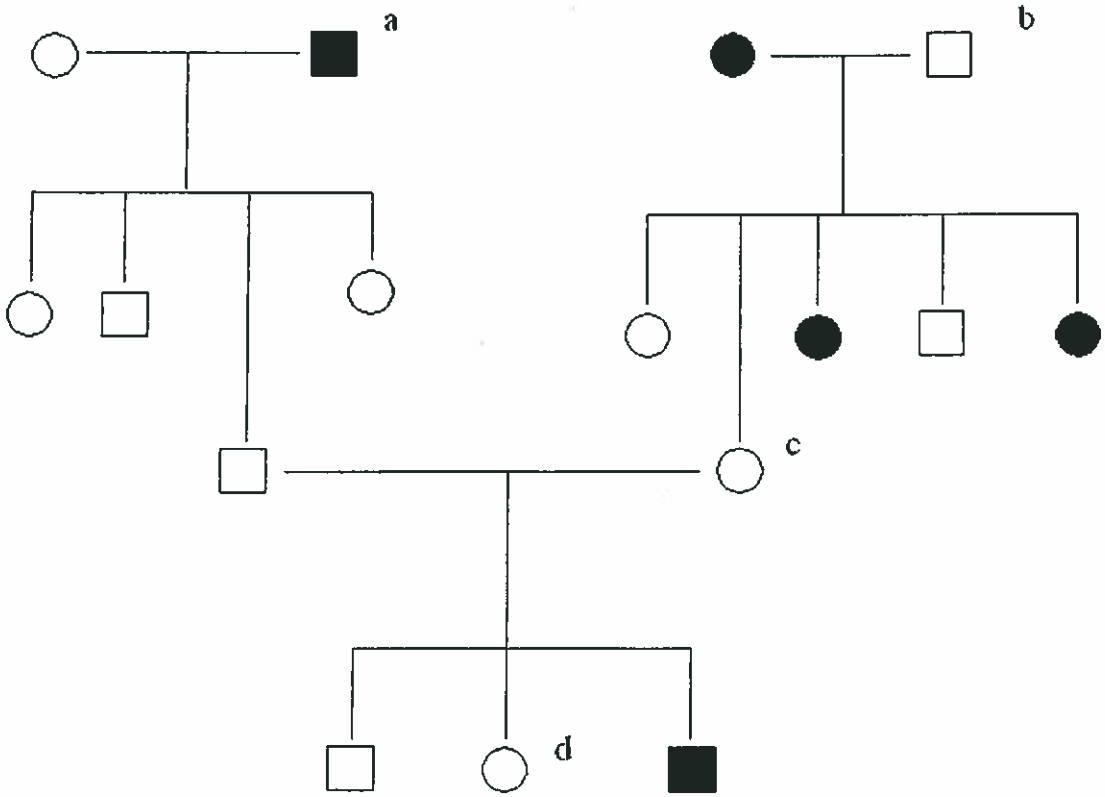

Answers: a= c=
b= d=

Create-a-Pedigree Summative Assessment

Part 1
Create a 3-generation family pedigree chart. You may base it on your own family or create one totally from your imagination.

Select one trait and create a letter symbol to represent the dominant and recessive alleles for the trait. Diagram the trait through the pedigree. Label each member of the family with their genotype and phenotype.

Finally, write out your Pedigree analysis, describing each member's relationship to the trait, the characteristics inherited from parents, and the characteristics passed down to the children.

Create-a-Pedigree RUBRIC

Assignment Rubric (maximum points available: 20)

	1	2	3	4
Symbols	< 70% of the individuals in the pedigree are labeled with the appropriate symbols	70% of the individuals in the pedigree are labeled with the appropriate symbol	80% of the individuals in the pedigree are labeled with the appropriate symbol	At least 90% of the individuals in the pedigree are labeled with the appropriate symbol
Relationships	<70% of the relationships are correctly marked	70% of the relationships are correctly marked	80% of the relationships are correctly marked	At least 90% of the relationships are correctly marked
Trait	A single trait is not traced through the pedigree using shaded symbols			A single trait is clearly traced through the pedigree using shaded symbols
Phenotypes	<70% of the phenotypes are listed	70% of the phenotypes are listed	80% of the phenotypes are listed	At least 90% of the phenotypes are listed
Genotypes	<70% of the genotypes are listed	70% of the genotypes are listed	80% of the genotypes are listed	At least 90% of the genotypes are listed

Student Name: _____

PRESENTATION
RUBRIC and SCORING GUIDE

OUTCOME: The student will explain elements of a Pedigree chart and trace a trait through three generations of a family in an oral class presentation.

Criteria/Expectation Level	F 1-2	A 3	M 4	E 5-6
IDEAS and CONTENT				
1. The main purpose of the assignment is stated in the presentation.				
2. Explanations of how the trait is passed from parents to children are clear and complete.				
3. Evidence of labeling is verified through logical demonstration of phenotypes and genotypes, dominant and recessive alleles.				
4. Trait behavior is consistent with scientific knowledge.				
ORGANIZATION				
5. The presentation provides a clear and logical progression of information from the lesson.				
6. Explanation of information flows together easily.				
7. Transition is evident in the presentation and is used effectively and smoothly.				
8. Closing statements end the presentation effectively.				
VOICE				
9. Tone fits purpose and audience.				
10. Student uses own words via paraphrasing				
WORD CHOICE				
11. Clear, concise and interesting words used in presentation.				
12. Student does not include his own opinion in summary presentation.				
13. Common and uncommon words used accurately.				
SENTENCE FLUENCY				
14. Statements pertain to the topic of the presentation.				
15. Clear; concise and complete statements.				
16. Varied statement beginnings and lengths.				
CONVENTIONS (presentation and delivery)				
17. Presentation is characterized by correct subject/verb agreement.				
18. Pauses used appropriately.				
19. Enthusiasm/interest in topic is apparent.				

Score: /6

Ideas and Content items are heavily weighted. Scores are awarded percentages:
6 = 100%
5 = 90%
4 = 80%
3 = 70%
2 = 60%
1 = 50%