Grade Level	Fourth Grade	**Content Area**	Science
Course Title (grades 9-12 Only)	N/A		
Expected Prior Knowledge *List the knowledge/skills mastered earlier in the year that are foundational to the mastery of the Required Standard(s).*	In first grade, scholars study static electricity, basic parts of a simple circuit, conductive and nonconductive materials, safety rules for electricity, and Thomas Edison. In a previous unit in fourth grade (Chemistry), scholars studied the basic units of an atom, including the charges of electrons and the effects of opposite and same charges.		
Alignment to Program of Instruction *Describe how the methods of instruction found in this sequence of lessons align to the Program of Instruction described in the application package.*	The Arizona College and Career science standards form the basis for The Grande Innovation Academy's science curriculum. Scholars will learn standards using the Arizona College and Career strands building from year to year. Core Knowledge will be used along with supplemental resources to build understanding and create additional opportunities for application.		
Standard Number* and Description *The standard number and description of the Required Standard(s) being instructed and assessed to mastery in the curriculum sample.*	Strand 5 Physical Science Concept 3 - Energy and Magnetism (Investigate different forms of energy.) PO #1 - Demonstrate that electricity flowing in circuits can produce light, heat, sound, and magnetic effects. PO #3 - Explain the purpose of conductors and insulators in various practical applications.		
Materials/Resources Needed *List all items the teacher and students will need for the entire sequence of instruction (excluding common consumables)*	• A True Book: Electricity by Matt Mullins (ISBN-13: 9780f531265819) • "Electrical Charges" & "Static Electricity" worksheets (front/back copy) • Static electricity centers materials: balloons (inflated), string, wool, small paper holes, water • Static Electricity Inquiry worksheet • "Static Electricity" by Cindy Grigg comprehension worksheet • "Static Electricity" Super Teacher worksheet • "All About Circuits" & "Will the Lightbulb Turn On?" (Education.com worksheet) • "Build Your Own Simple Circuit" (Education.com worksheet) • Circuits: D battery and holder, 1.5 v. bulb, 3 wires with alligator clips, electrical switch, doorbell • "What's Wrong With These Circuits?" Super Teacher worksheet • What Your Fourth Grader Needs to Know by Ed Hirsch (ISBN: 978-0385337656) • Website: http://www.bbc.co.uk/schools/scienceclips/ages/8_9/circuits_conductors.shtml • "Electrical Circuits" Super Teacher worksheet • "Electricity & Magnetism_The Magic of Magnets" video • "Build Your Own Electromagnet" worksheet		

Lesson (add as needed)	**Instructional Strategies -** *List and describe teacher actions, lesson by lesson, which will provide students with opportunities to engage the grade-level rigor defined by the Required Standard(s). Indicate alignment of instructional strategies to specific component(s) or content/skill(s) of the Required Standard/component.*	**Student Activities -** *Describe the activities, lesson by lesson, in which students will engage to allow them to master the grade-level rigor defined by the Required Standard(s). Indicate alignment of student activities to specific component(s) or content/skill(s) of the Required Standard/component.*
1	**Anticipatory Set:** Teacher will (TW) post a Circle Map with the question, "What do you know about electricity?" **Objective and Purpose:** TW post on board: I can demonstrate magnetic effects of electricity. **Instructional Delivery: Whole Group** TW will read aloud and discuss illustrations on pages 7-11 and 21-27 of A True Book: Electricity. **Key Points:** • Charge is an amount of electricity caused by too few or too many electrons • Electron is a negatively charged particle that spins around the nucleus of an atom • Static electricity is a buildup of electric charge **Modeling:** TW project the "Electrical Charges" & "Static Electricity" worksheet, or draw on the board. TW model counting and subtracting the difference of positive and negative charges to determine the overall charge. **Check for Understanding** (CFU, using Teach Like a Champ) TW circulate room and say "Get Ready, Get Ready, scholar name" to check for identification of positive vs. negative overall charges. "Get Ready, Get Ready, and scholar. What is the charge for #2?" TW wait no more than five seconds for response. If no response, TW calls on another scholar while circulating room, then goes back to scholar with no response, and says, "What did [scholar name] say?" **Guided Practice:** TW distribute Static Electricity Inquiry. Scholars will participate in centers to promote concept of static electricity and attracting/repelling	**Anticipatory Set:** The scholars will complete a Circle Map with "Electricity" in the center in their interactive science notebooks. **Objective and Purpose:** I can demonstrate magnetic effects of electricity. **Instructional Delivery: Whole Group** Scholars will listen to teacher read aloud. **Modeling:** Scholars will observe teacher counting and subtracting the difference of positive and negative charges to determine the overall charge. Scholars will complete "Electrical Charges" & "Static Electricity" worksheet. **Check for Understanding** (CFU, using Teach Like a Champ) Scholar stands as teacher gives Check for Understanding signal of "Get Ready, Get Ready, scholar." Scholar replies with response of "positive" or "negative" charge. If scholar doesn't respond in five seconds, scholar still needs to be ready as there is no opt-out, and teacher will come back again. **Guided Practice: Small Groups** Scholars will engage in small groups, listening for guidance from teacher. Scholars will observe and compare effects of static electricity with rubber, wool, paper, and water. Scholars will record data on their Static Electricity Inquiry worksheet. **Independent Practice** Scholars will complete "Static Electricity" comprehension worksheet. **Closure/Exit Ticket:** Scholars will illustrate balloons that attract and repel based on charges. Scholars will wait for teacher to call for closure and check for understanding.

	charges. TW distribute materials according to each small group's station. TW guide scholars to follow the directions for each center, and will determine the appropriate time to rotate stations. TW circulate, checking for scholar understanding at each station. **Independent Practice:** TW read aloud "Static Electricity" and provide scholars 10 minutes to answer comprehension questions. **Closure/Exit Ticket:** TW pass out note cards to scholars and instruct them to draw two balloons that attract on one side, and two balloons that repel on the other side. TW explain that scholars must label balloons with "+" and "-" symbols (just as modeled previously).	
2	**Anticipatory Set:** TW distribute "Static Electricity" Super Teacher worksheet. After allowing scholars time to complete the questions, TW review answer with explanations. **Objective and Purpose:** TW post the objective: I can demonstrate that electricity can produce light, heat, and sound. **Instructional Delivery: Whole Group** TW read aloud A True Book: Electricity. TW explain that circuits bring energy from one place to another. TW project "All About Circuits," and point out 3 parts of a circuit. TW illustrate the 3 basic parts of a circuit using a Brace Map. **Key Points:** • Circuits have 3 basic parts: • energy source (battery or generator), • pathway (wires), and • receiver (light bulb) **Modeling:** TW will model identifying successful circuits by projecting "Will the Lightbulb Turn On?" and answering first question. **Check for Understanding** (CFU, using Teach Like a Champ) TW circulate room and say "Get Ready, Get Ready, scholar name" to check if a light bulb will turn on. "Get Ready, Get Ready, and <scholar's name>, will Circuit A turn on?" TW wait no more than five seconds for	**Anticipatory Set:** The scholars will complete "Static Electricity" Super Teacher worksheet, and check their answer when the teacher reviews. **Objective and Purpose:** I can demonstrate that electricity can produce light, heat, and sound. **Instructional Delivery: Whole Group** The scholars will create a Brace Map of the 3 parts of a circuit. **Modeling:** The scholars will observe as teacher models identifying successful circuits by projecting "Will the Lightbulb Turn On?" **Check for Understanding** (CFU, using Teach Like a Champ) Scholar stands as teacher gives Check for Understanding signal of Get Ready get Ready, scholar." Scholar replies by identifying if a light bulb will turn on. If scholar doesn't respond in five seconds, scholar still needs to be ready as there is no opt-out, and teacher will come back again. **Guided Practice: Small Group/Pairs** The scholars will work in groups or pairs and follow the directions of "Build Your Own Simple Circuit." **Independent Practice** The scholars will illustrate their successful circuit in their science notebooks. TW remind scholars to use the symbols discussed earlier in class to represent parts of a circuit.

	response. If no response TW call on another scholar while circulating room, then goes back to scholar with no response, says "What did <scholar's name> say?" **Guided Practice: Small Groups/Pairs** TW guide scholars in following directions of "Build Your Own Simple Circuit." TW monitor scholars' use of materials and facilitate successful connection of simple circuits that produce a lighted bulb. TW guide scholars in testing their circuit with the light bulb AND door bell. **Independent Practice** TW instruct scholars to illustrate their successful circuit in their science notebooks. TW remind scholars to use the symbols discussed earlier in class to represent parts of a circuit. **Closure:** TW check notebooks for accurate illustrations and use of symbols.	**Closure:** Scholars will give thumbs up and wait for teacher to come to check for understanding and mastery.
3	**Anticipatory Set:** TW distribute "What's Wrong With These Circuits?" worksheet. After scholars have had time to complete all questions, TW review answers. **Objective and Purpose:** TW post the objective: I can explain the purpose of conductors and insulators. **Instructional Delivery: Whole Group** TW read aloud <u>What Your Fourth Grader Needs to Know</u> pages 267-268, and <u>A True Book: Electricity</u> pages 16-17. TW draw attention to how insulators protect us from electric currents. **Key Points:** • conductor – material that readily allows electric current to flow • insulator – material that does not allow electric current to flow through **Modeling:** TW project "BBC Circuits_Conductors" interactive website, and model at least one conductor and insulator. **Check for Understanding** (CFU, using <u>Teach Like a Champ</u>) Using BBC website from modeling, TW say "Get Ready, Get Ready, <scholar name>" to check if an item is an insulator/conductor. "Get	**Anticipatory Set:** The scholars will complete "What's Wrong With These Circuits?" worksheet, and check their answer when the teacher reviews. **Objective and Purpose:** I can explain the purpose of conductors and insulators. **Instructional Delivery: Whole Group** Scholars will highlight key points in their vocabulary. **Modeling:** The scholars will observe as teacher models identifying insulators and conductors on "BBC Circuits_Conductors" website. **Check for Understanding** (CFU, using <u>Teach Like a Champ</u>) Using BBC website, scholar stands as teacher gives Check for Understanding signal of "Get Ready get Ready, scholar." Scholar replies by identifying if an item is an insulator or conductor. If scholar doesn't respond in five seconds, scholar still needs to be ready as there is no opt-out, and teacher will come back again. **Guided Practice: Small Group/Pairs** The scholars will use simple circuits from previous lesson to test conductivity of various classroom objects. TW facilitate scholars

	Ready, Get Ready, and <scholar's name>, is this an insulator or conductor?" TW wait no more than five seconds for response. If no response TW call on another scholar while circulating room, then goes back to scholar with no response, says "What did <scholar's name> say?" **Guided Practice: Small Groups/Pairs** TW guide scholars in using simple circuits from previous lesson to test conductivity of various classroom objects. TW facilitate scholars recording their predictions and data in science notebooks. **Independent Practice** TW distribute note cards, and instruct scholars to explain the purpose of conductors and insulators. **Closure:** TW check note cards for accurate explanation.	recording their predictions and data in science notebooks. **Independent Practice** The scholars will explain the purpose of conductors and insulators. **Closure:** Scholars will give thumbs up and wait for teacher to come to check for understanding and mastery.
4	**Anticipatory Set:** TW distribute "Electricity" vocabulary worksheet. After scholars have had time to complete all questions, TW review answers. **Objective and Purpose:** TW post the objective: I can demonstrate magnetic effects of electricity. **Instructional Delivery: Whole Group** TW read aloud A True Book: Electricity pages 29-37. **Key Points:** • electromagnet – a magnet formed by a current passed through a wire coiled around magnetic material **Modeling:** TW show "Electricity & Magnetism_The Magic of Magnets" video. TW discuss how adding coils to an electromagnet increases its strength. **Check for Understanding** TW instruct scholars to "Think-Pair-Share" 3 questions: 1. How does electricity affect magnetism? 2. How do you increase the strength of an electromagnet? 3. What are some items that use electromagnets for power?	**Anticipatory Set:** Scholars will complete "Electricity" vocabulary worksheet, and check answers. **Objective and Purpose:** I can demonstrate magnetic effects of electricity. **Instructional Delivery: Whole Group** Scholars will listen to teacher read aloud. **Modeling:** Scholars will watch "Electricity & Magnetism_The Magic of Magnets" video. **Check for Understanding** Scholars will "Think-Pair-Share" how electricity affects magnetism, how to increase the strength of an electromagnet, and examples of electromagnets. **Guided Practice: Small Groups/Pairs** TW distribute materials, and guide scholars in building electromagnets using "Build Your Own Electromagnet" worksheet. **Independent Practice**

	Guided Practice: Small Groups/Pairs TW distribute materials, and guide scholars in building electromagnets using "Build Your Own Electromagnet" worksheet. **Independent Practice** TW instruct scholars to create a Multi-Flow Map (cause & effect) of electricity and magnetism in their notebooks **Closure:** TW check notebooks for accurate explanation.	TW instruct scholars to create a Multi-Flow Map (cause & effect) of electricity and magnetism in their notebooks **Closure:** TW check notebooks for accurate explanation.
S.A.	**Summative Assessment Items and Scoring:** *Below, provide at least three Summative Assessment Items that together accurately measure student mastery of the application of the content and/or skills as defined by the grade-level rigor in the Required Standard(s). For each assessment item, provide an answer key or scoring rubric which clearly describes how assessment items are to be scored and how points will be awarded, such that mastery of the application of the content and/or skills as defined by the grade-level rigor in the Required Standard is clearly demonstrated by an acceptable score.*	**S.A. 1** Explain why each circuit will or will not light the bulbs: 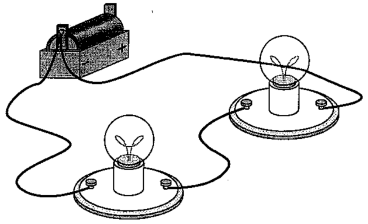 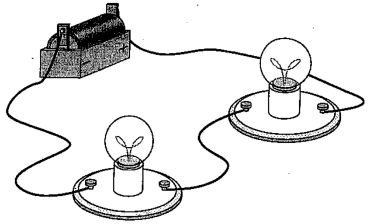 **S.A. 2** Label one "conductor" and one "insulator" on the extension cord. Then explain why each part is important. 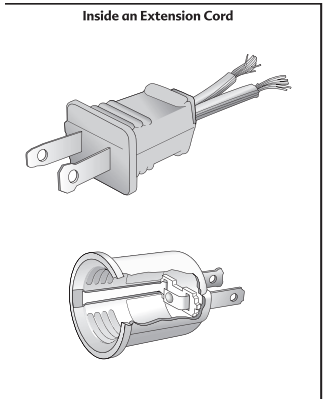 **S.A. 3** Describe how to make an electromagnet stronger.

Summative Assessment 1:

Given visuals, the scholar will explain why circuit 1 and circuit 2 will or will not light the bulbs: There are 4 possible points for each answer with a total of 8 points possible. (See Rubric) Scholar mastery is set at 6 points total. (75%)

Answer Key: Circuit 1 will not light the bulbs because it is not a complete circuit. The wire is not connected to the opposite end of the battery.
Circuit 2 will light the bulbs because it is a complete closed circuit, and electricity can travel through it.

Summative Assessment 2:
Given visuals, (extension cord parts) the scholar will identify at least one conductor and one insulator and explain why each is important. There are 4 possible points for each answer with a total of 8 points possible. (See Rubric) Scholar mastery is set at 6 points total. (75%)

Answer Key: Conductors: metal prongs, wire ends, inner metal casing
Insulators: rubber plug, rubber wire insulation
The conductor allows electricity to flow through the wires and bring power to the device. The insulation protects us from being shocked by live electricity.

Summative Assessment 3:
In sentence form, (2-3 sentences) the scholar will identify how to make an electromagnet stronger. There are 4 possible points for this answer, (see rubric) with mastery being set at 3 points. (75%)

Answer Key: You can make an electromagnet stronger by adding more coils around the magnetic core.

A Progression Toward Mastery				
Standards Assessed	**STEP 1** **Little evidence of reasoning without a correct answer.** **(1 Point)**	**STEP 2** **Evidence of some reasoning without a correct answer.** **(2 Points)**	**STEP 3** **Evidence of some reasoning with a correct answer.** **(3 Points)**	**STEP 4** **Evidence of solid reasoning with a correct answer.** **(4 Points)**
Summative Assessment 1 & 3	The scholar is unable to correctly demonstrate any of the following: *Complete circuits must be closed to transmit electricity. *Incomplete/open circuits will not allow electricity to flow. *Increasing electricity increases the power of the magnet.	The scholar correctly demonstrates 1 of the following: *Complete circuits must be closed to transmit electricity. *Incomplete/open circuits will not allow electricity to flow. *Increasing electricity increases the power of the magnet.	The scholar correctly demonstrates 2 of the following: *Complete circuits must be closed to transmit electricity. *Incomplete/open circuits will not allow electricity to flow. *Increasing electricity increases the power of the magnet.	The scholar correctly demonstrates: *Complete circuits must be closed to transmit electricity. *Incomplete/open circuits will not allow electricity to flow. *Increasing electricity increases the power of the magnet.
Summative Assessment 2	The scholar is unable to correctly explain any of the following: *Conductors allow electricity to flow through them. *Insulators do not allow electricity to flow through them.	The scholar successfully explains 1 of the following: *Conductors allow electricity to flow through them. *Insulators do not allow electricity to flow through them.	The scholar successfully explains: *Conductors allow electricity to flow through them. *Insulators do not allow electricity to flow through them.	The scholar successfully explains: *Conductors allow electricity to flow through them. *Insulators do not allow electricity to flow through them. *Insulators protect us from the flow of electricity.